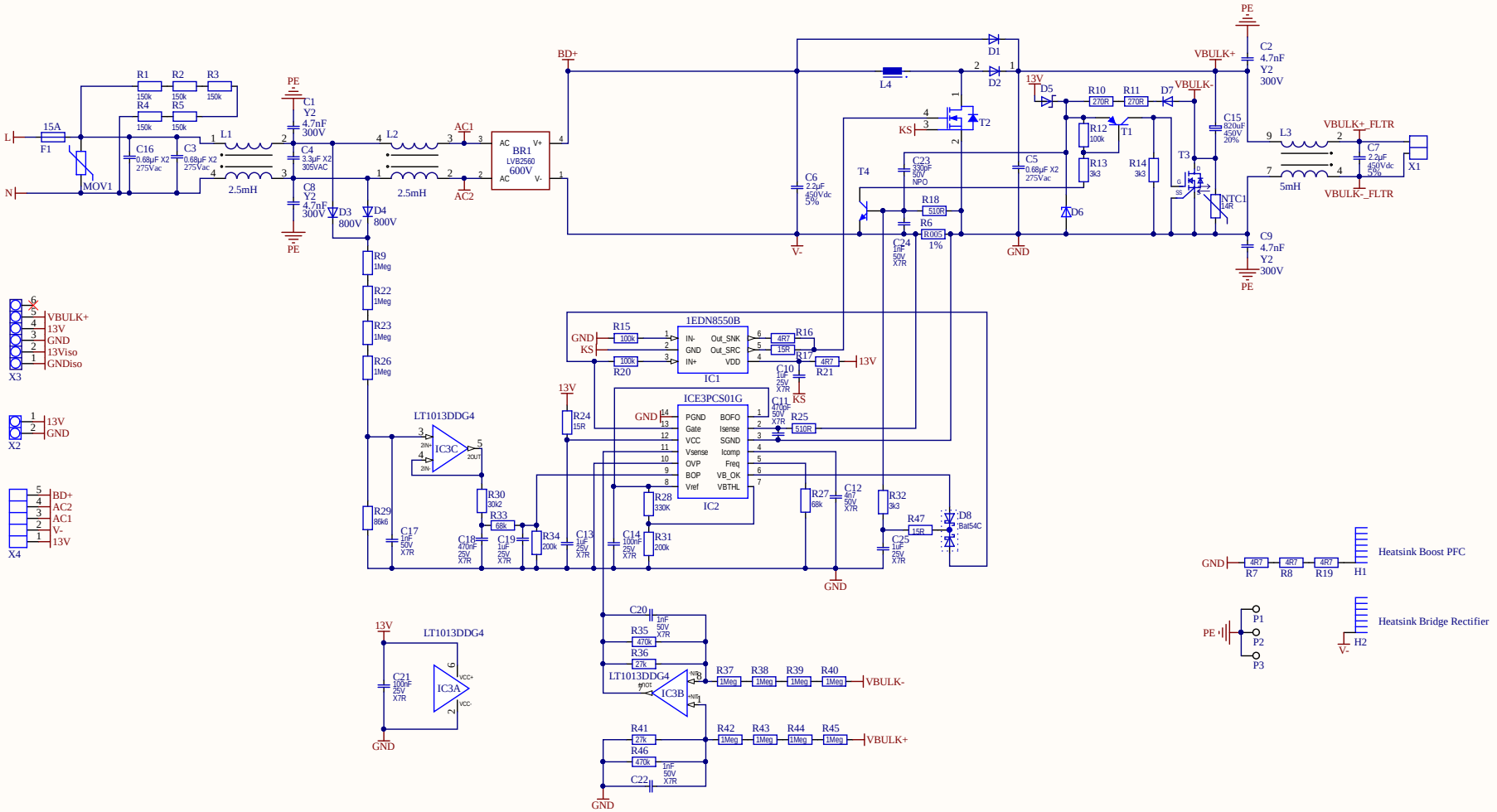

Title *		
Size: A3	Number:*	Revision:*
Date: 02.12.2019	Time: 08:40:07	Sheet * of *
File: \\Mucsdn01\IP_Mark\Power Mgmt & Supply\TM_HV\Pevere\P100002640 KIT_2K4W_ACT_BRD_S7\M100002482\M100002482		

Altium